REV	REVISION	BY	ECN	DATE

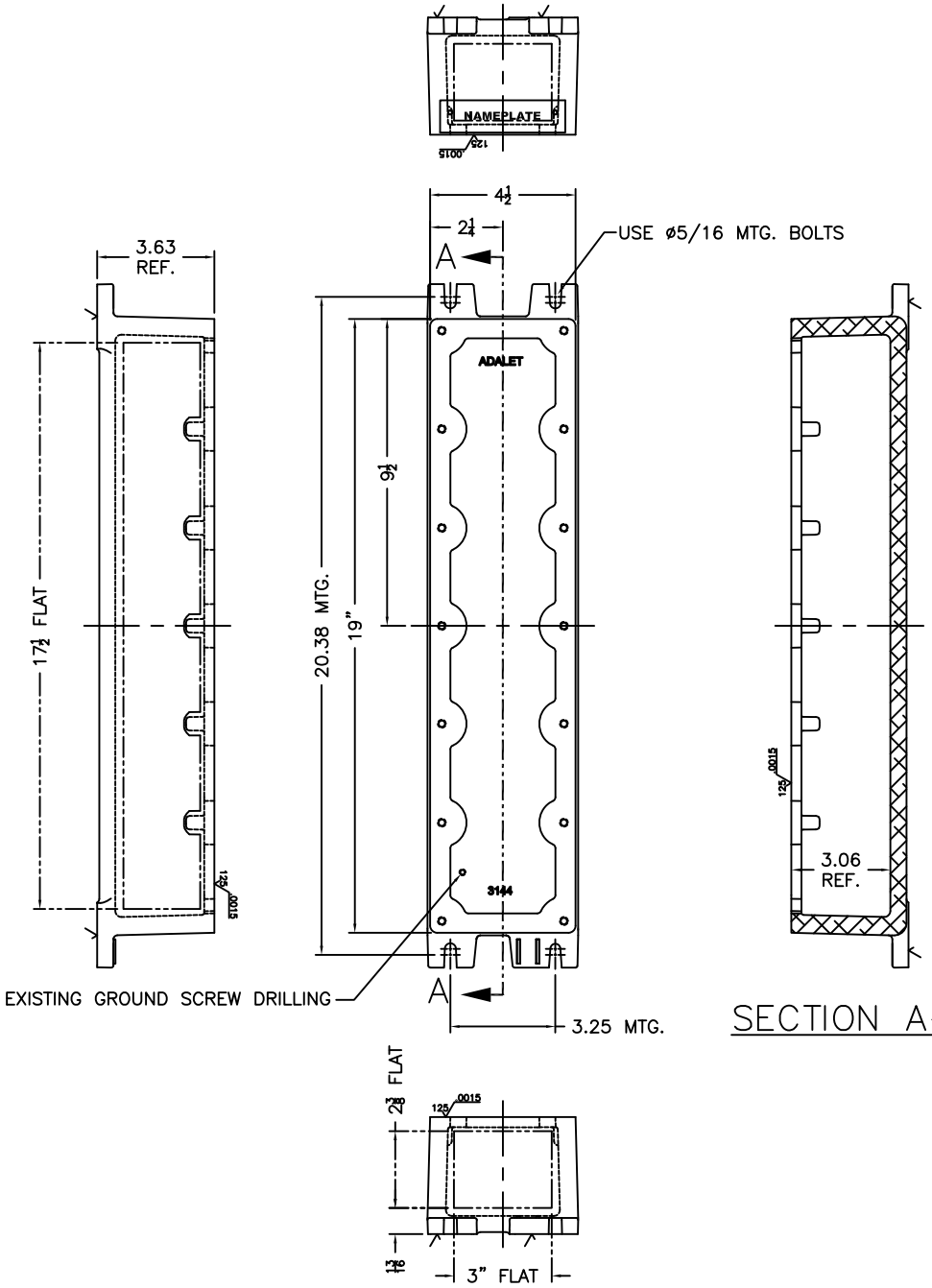

SECTION A–A

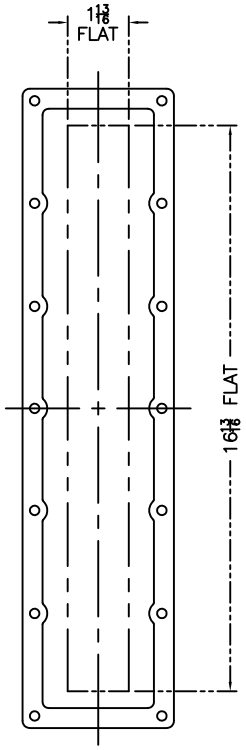

XIF(C)(X) 0318 (N4) COVER

DIMENSIONS SHOWN ARE FOR REFERENCE ONLY, NOT FOR MANUFACTURING . CONTACT ADALET ENGINEERING FOR TIGHT FITS OR TOLERANCE ISSUES !

DO NOT SCALE DRAWING
UNLESS OTHERWISE SPECIFIED DIMENSIONS ARE IN INCHES.
CAST TOLERANCES ON DIMENSIONS NOT OTHERWISE SPECIFIED:
✓ = 1/8" STOCK
FILLET OR CORNER RADII 1/8"
DRAFT 1 1/2°
FRAC ±1/16"
ANGLES ± 1°
MACHINE TOLERANCES ON DIMENSIONS NOT OTHERWISE SPECIFIED:
✓ = 125
.XX ± .03" .XXX ± .010"
FILLET RADII .03"
EDGE BREAK .005"–.015" R. or 45°
ANGLES ± 0°–30'
GAGING FOR THREADED HOLES NOT OTHERWISE SPECIFIED:
NPT E-21-2.8
NPSM E-24-1.0

THIRD ANGLE PROJECTION

ADALET
A SCOTT FETZER COMPANY
Enclosure Systems · Cable Accessories
Cleveland, OH 44135

NOTICE TO PERSONS RECEIVING THIS DRAWING:
ADALET-PLM CLAIMS PROPRIETARY RIGHTS IN THE MATERIAL DISCLOSED HEREON. THIS DRAWING IS ISSUED IN CONFIDENCE FOR ENGINEERING INFORMATION ONLY AND MAY NOT BE REPRODUCED OR USED TO MANUFACTURE ANYTHING SHOWN HEREON WITHOUT DIRECT WRITTEN PERMISSION FROM ADALET-PLM TO THE USER.

MATERIAL	SEE NOTES
FINISH	TUMBLAST
CAT NO	XIF(C)(X) 031803 (N4)
TITLE	XIF(C)(X) 031803 (N4) ENCLOSURE OUTLINE DRAWING
DRAWN BY	MCP
DATE	08/13/10
ENG APPROVAL	
PLOT SCALE	1=3
MFG APPROVAL	
DWG SIZE	C
DWG NO	
SHT	10F1
REV	A