23335

REV	REVISION	BY	ECN	DATE

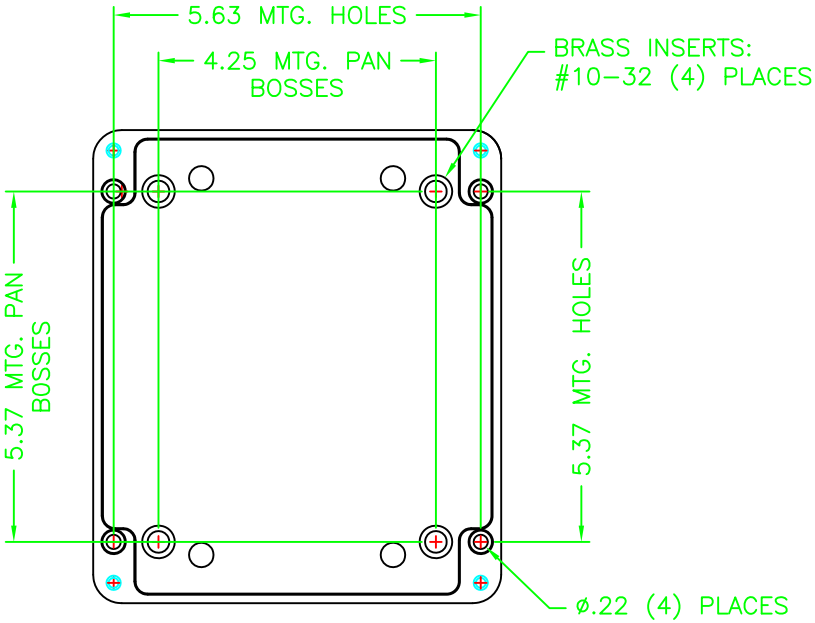

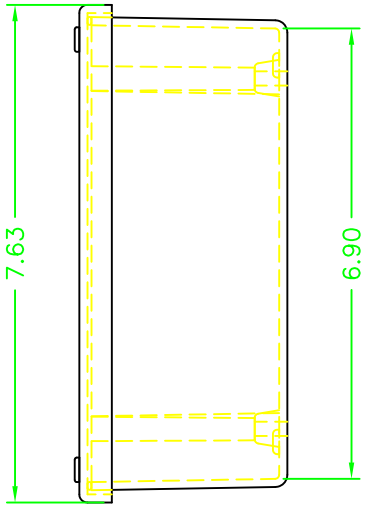

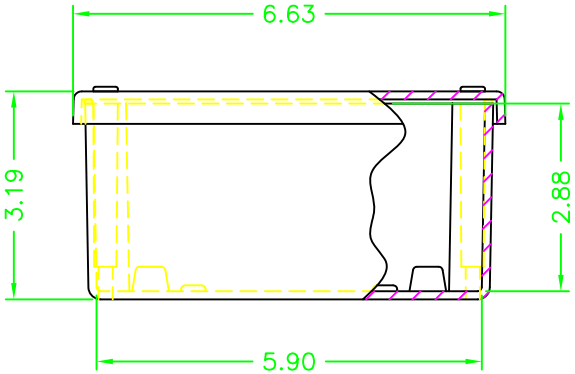

DO NOT SCALE DRAWING
UNLESS OTHERWISE SPECIFIED DIMENSIONS ARE IN INCHES
SHEET METAL TOLERANCES NOT OTHERWISE SPECIFIED:
FRAC ±1/16"
.XX ± .03"
.XXX ± .010"
ANGLES ± 0-30'
INSIDE BEND RADIUS = .040" NOM.
WARPAGE = 1/16" PER FOOT
ALL WELD SIZES ARE MIN.

ADALET
A SCOTT FETZER COMPANY
Enclosure Products & Fitting Accessories
Cleveland, OH

NOTICE TO PERSONS RECEIVING THIS DRAWING
ADALET CLASS PROPRIETARY INFO: IS THE SUBJECT DRAWING. THIS DRAWING & DATA IS CONFIDENTIAL AND PROPRIETARY TO ADALET. IT IS LOANED FOR INFORMATION & QUOTATION ONLY AND NOT FOR A REPRODUCED OR SENT TO MANUFACTURE ANYTHING SHOWN UNLESS SUCH SERVICE WRITTEN PERMISSION FROM ADALET IS THE MAIN.

MATERIAL
FINISH
PART NO. N4X-FG-070603

TITLE
N4X-FG-070603
FIBERGLASS ENCLOSURE

DRAWN BY	TJ	DATE	12-19-05
ENG APPROVAL		PLOT SCALE	1=1
MFG APPROVAL		CAD SIZE	D
ENG NO	23335	SHEET	10F1