REV	REVISION	BY	ECN	DATE
A	INITIAL RELEASE	CLB		6/3/03

242416

UNCONTROLLED DRAWING

(DATA SUBJECT TO CHANGE WITHOUT NOTICE)

FOR ADDITIONAL HELP CONTACT ENGINEERING@ADALET.com

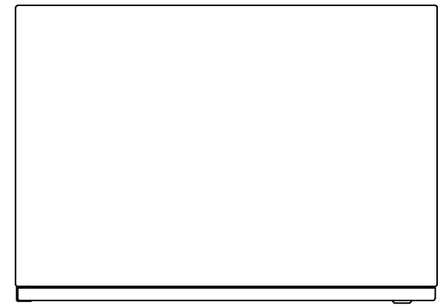

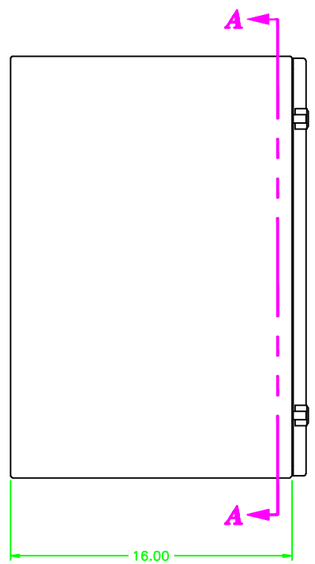

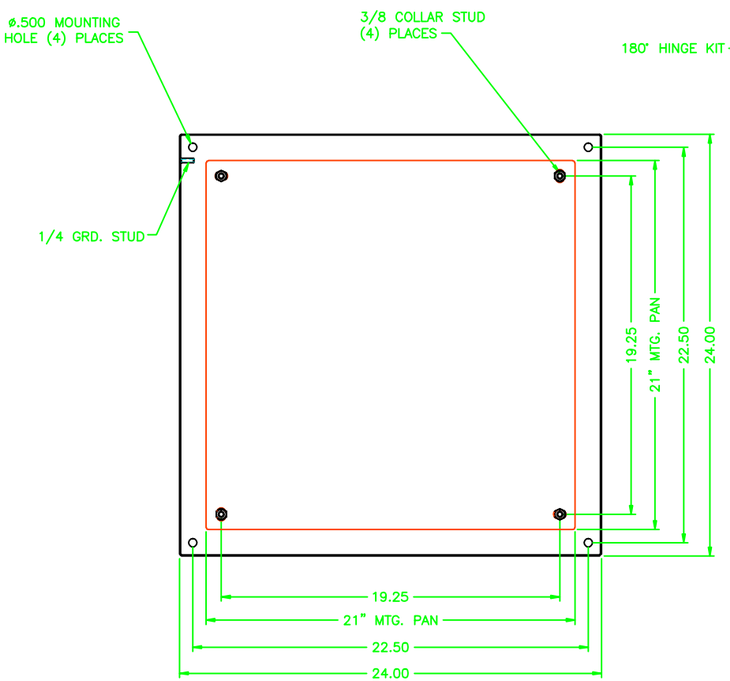

SECTION A-A

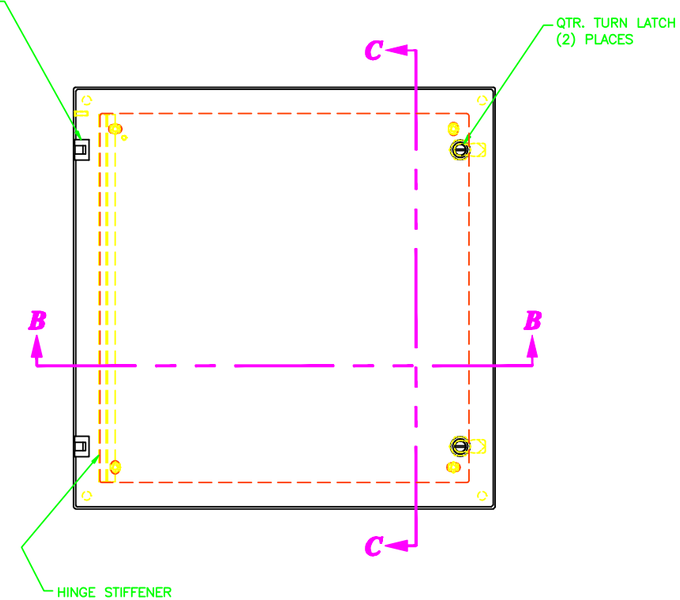

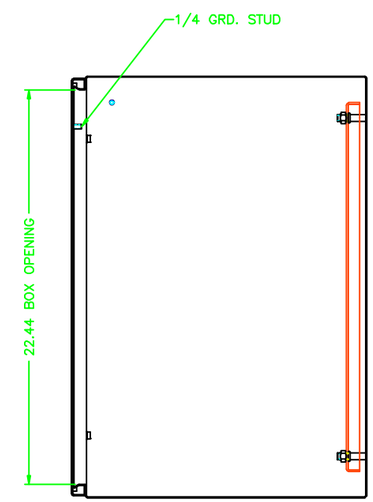

SECTION C-C

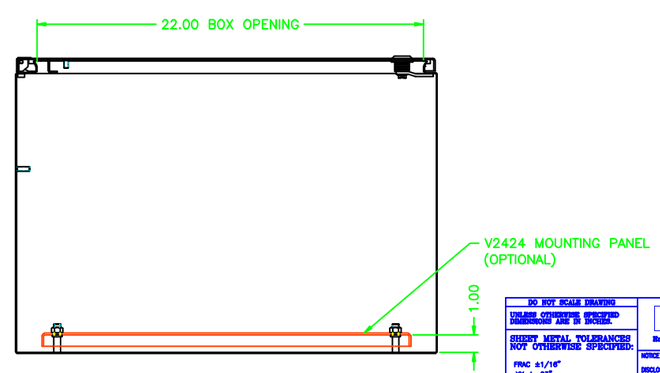

SECTION B-B

ENCLOSURE MATERIAL	CATALOG NUMBER	PART NUMBER
SS316L	AVSS6-242416	M10093
SS304	AVSS-242416	M10039

DO NOT SCALE DRAWING

UNLESS OTHERWISE SPECIFIED DIMENSIONS ARE IN INCHES.

SHEET METAL TOLERANCES NOT OTHERWISE SPECIFIED:

FRAC ±1/16"
.XX ± .03"
.XXX ± .010"
ANGLES ± 0°-30'
INSIDE BEND RADIUS = .040" NOM.
WARPAGE = 1/16" PER FOOT
ALL WELD SIZES ARE MIN.

ADALET
A SCOTT FETZER COMPANY
Enclosure Systems • Cable Accessories

NOTICE TO PERSONS RECEIVING THIS DRAWING:
ADALET CLAIMS PROPRIETARY RIGHTS IN THE MATERIAL DISCLOSED HEREON. THIS DRAWING IS ISSUED IN CONFIDENCE FOR ENGINEERING INFORMATION ONLY AND MAY NOT BE REPRODUCED OR USED TO MANUFACTURE ANYTHING SHOWN HEREON WITHOUT DIRECT WRITTEN PERMISSION FROM ADALET TO THE USER.

MATERIAL
FINISH
CAT NO

TITLE: 242416 VICTORY ENCLOSURE ASSEMBLY

DRAWN BY	CLB	DATE	6/3/03
ENG APPROVAL		PLOT SCALE	1=4
MFG APPROVAL		DWG SIZE	D
DWG NO	242416	SHT 1OF1	REV A