REV	REVISION	BY	ECN	DATE

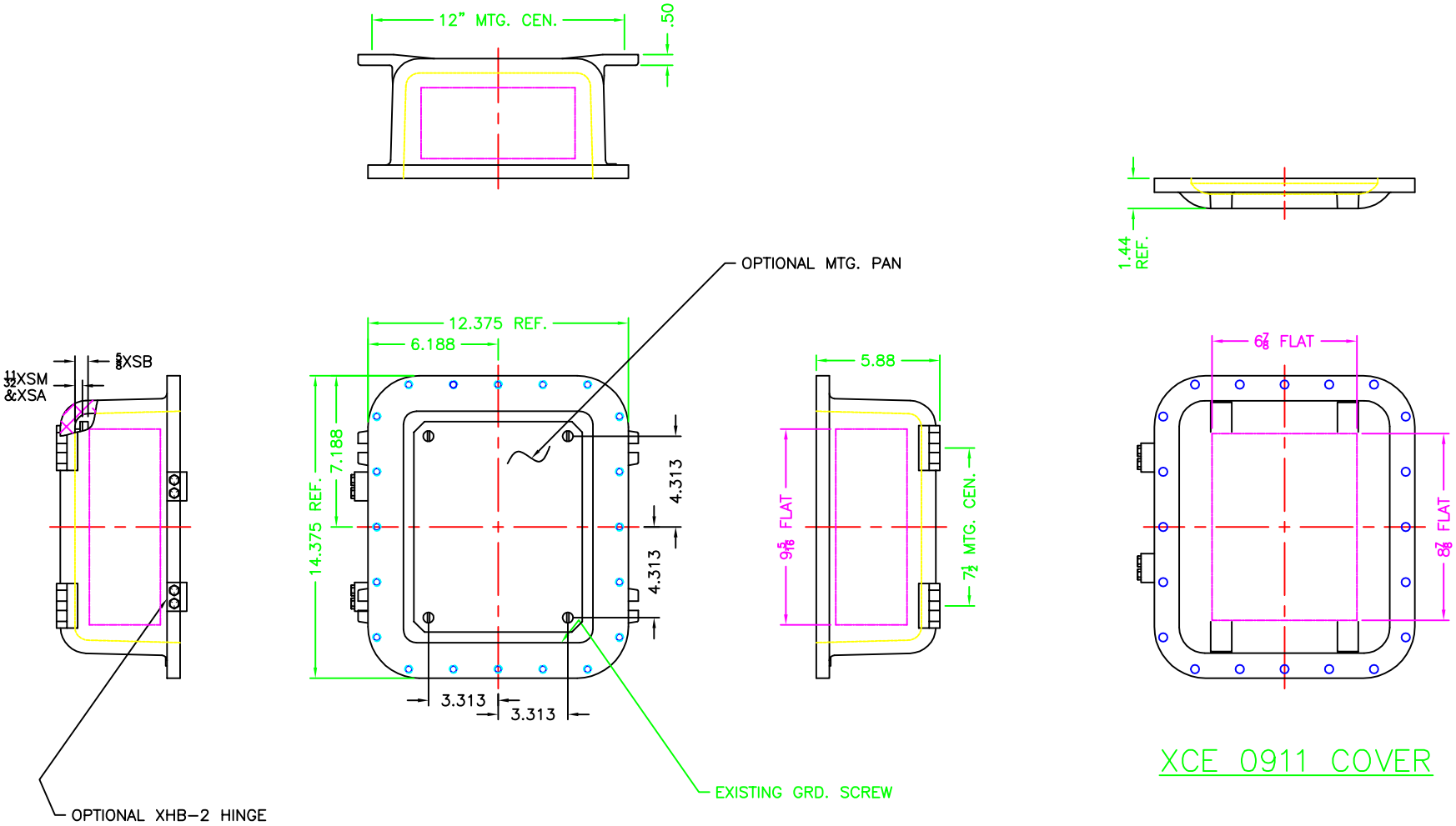

XCE 0911 COVER

NOTES:

COVER DRILLING ALLOWABLE IN XCE ONLY

1. MINIMUM SPACING FROM CENTER OF OPERATOR TO NEAREST FLAT IS $1\frac{1}{16}$.
2. MINIMUM SPACING BETWEEN $\frac{3}{4}$-14 NPSM OPERATOR CENTERS IS $2\frac{1}{2}$ FOR THIS ENCLOSURE.
3. MAXIMUM NUMBER OF OPERATORS IS 6.
4. DIMENSION FROM CENTER LINES OF COVER FOR OPERATORS.
5. DIMENSION FROM CENTER LINE AND BACK OF MTG. LUG FOR CONDUIT.
6. FOR MTG. ENCLOSURE USE 3/8 BOLT.

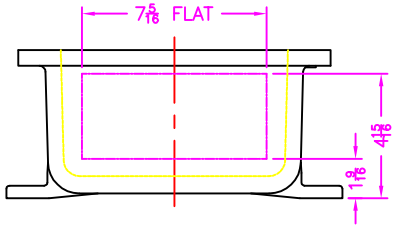

DO NOT SCALE DRAWING
UNLESS OTHERWISE SPECIFIED DIMENSIONS ARE IN INCHES.
CAST TOLERANCES ON DIMENSIONS NOT OTHERWISE SPECIFIED:
✓ = 1/8" STOCK
FILLET OR CORNER RADII 1/8"
DRAFT 1 1/2°
FRAC ±1/16"
ANGLES ± 1°
MACHINE TOLERANCES ON DIMENSIONS NOT OTHERWISE SPECIFIED:
✓ = 125
.XX ± .03" .XXX ± .010"
FILLET RADII .03"
EDGE BREAK .005"-.015" R. or 45°
ANGLES ± 0°-30'
GAGING FOR THREADED HOLES NOT OTHERWISE SPECIFIED:
NPT E-21-2.8
NPSM E-24-1.0

ADALET
A SCOTT FETZER COMPANY
Enclosure Systems · Cable Accessories

NOTICE TO PERSONS RECEIVING THIS DRAWING:
ADALET-PLM CLAIMS PROPRIETARY RIGHTS IN THE MATERIAL DISCLOSED HEREON. THIS DRAWING IS ISSUED IN CONFIDENCE FOR ENGINEERING INFORMATION ONLY AND MAY NOT BE REPRODUCED OR USED TO MANUFACTURE ANYTHING SHOWN HEREON WITHOUT DIRECT WRITTEN PERMISSION FROM ADALET-PLM TO THE USER.

MATERIAL
FINISH: TUMBLAST
CAT NO: XCE/XJF 091105

TITLE: MODIFIED XCE/XJF 091105 ENCLOSURE FOR

DRAWN BY	DDH	DATE	6-13-01
ENG APPROVAL		PLOT SCALE	1=4
MFG APPROVAL		DWG SIZE	C
DWG NO		SHT	10F1
		REV	