REV	REVISION	BY	ECN	DATE

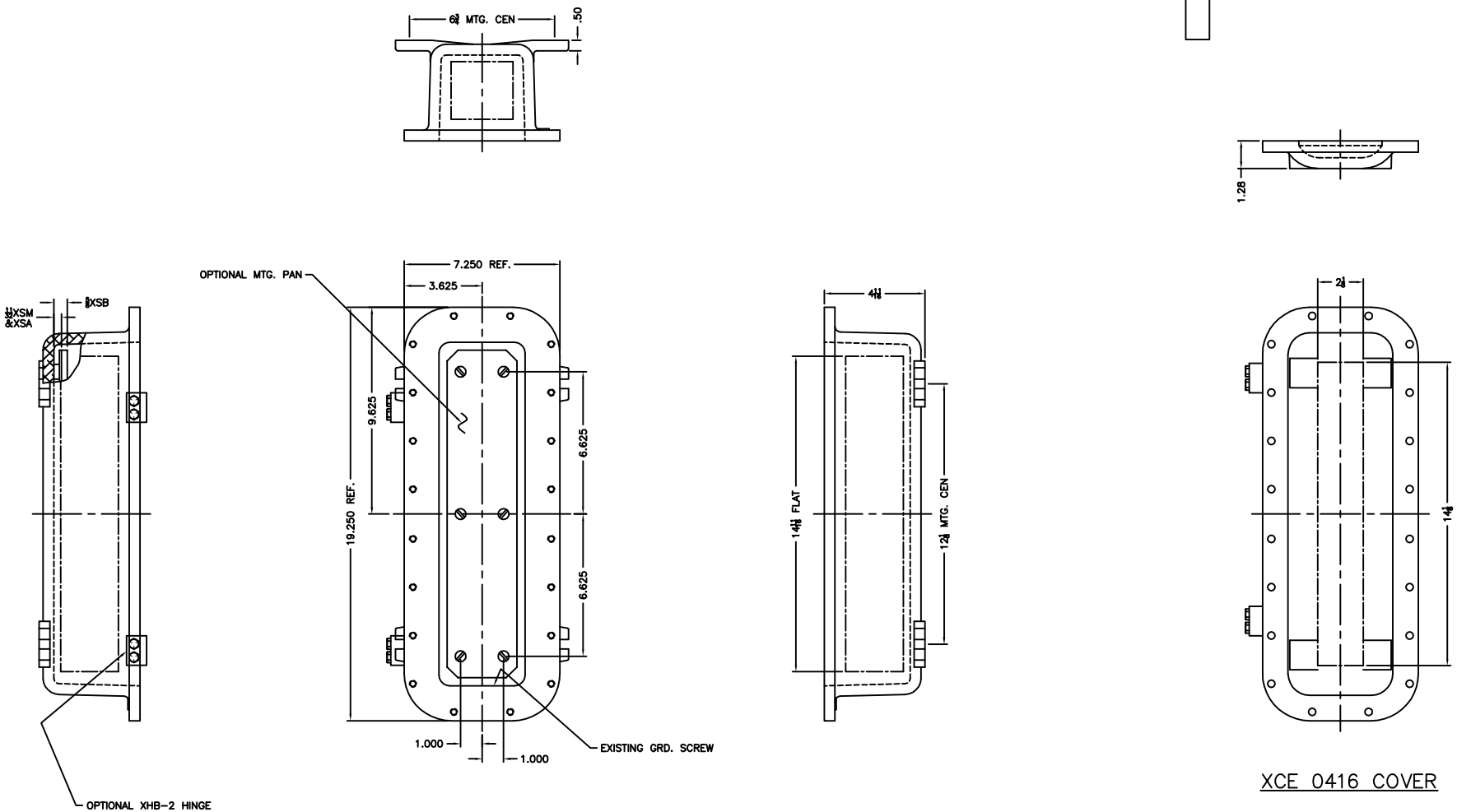

XCE 0416 COVER

NOTES:

COVER DRILLING ALLOWABLE IN XCE ONLY

1. MINIMUM SPACING FROM CENTER OF OPERATOR TO NEAREST FLAT IS 1 1/16.
2. MINIMUM SPACING BETWEEN ¾–14 NPSM OPERATOR CENTERS IS 2½ FOR THIS ENCLOSURE.
3. MAXIMUM NUMBER OF OPERATORS IS 5.
4. DIMENSION FROM CENTER LINES OF COVER FOR OPERATORS.
5. DIMENSION FROM CENTER LINE AND BACK OF MTG. LUG FOR CONDUIT.
6. FOR MTG. ENCLOSURE USE 3/8 BOLT.

ADALET
A SCOTT FETZER COMPANY
Enclosure Systems · Cable Accessories

TITLE: MODIFIED XCE/XJF 041604 ENCLOSURE FOR

DRAWN BY	DDH	DATE	4–20–01
ENG APPROVAL		PLOT SCALE	1=2.5
MFG APPROVAL		SIZE	D
FINISH	TUMBLAST	DWG NO	
CAT NO	XCE/XJF 041604		1OF1